High Power 1060nm PM 3-port Optical Circulator

High Power 1064nm Polarization Maintaining (PM) 3-port Optical Circulator is a fiber passive component built with TGG crystal, which can change signal light transmission path, the signal can be delivered from Port 1 to Port 2, the other signal light from Port 2 to Port 3, the high isolation can block the back reflection light. It's widely used in Laser System, Fiber Optic Sensor and Coherent Detecting field. The Optical Power can be up to 20W CW upon request.

Application:

Fiber Optic Amplifier
Fiber Optic Sensor
Laser System
Coherent Detecting

Features:

High Power
High Extinction Ratio
High Isolation
High Reliability

Specification:

Parameter	Symbol	Value	Unit
Center Wavelength	λ	1064	nm
Bandwidth	BW	±5	nm
Typ. Insertion Loss (Port 1 to 2, 2 to 3)	IL	1.3	dB
Max. Insertion Loss (Port 1 to 2, 2 to 3)	IL	1.5	dB
Typ. Isolation (Port 2 to 1, 3 to 2)	Iso	28	dB
Min. Isolation (Port 2 to 1, 3 to 2)	Iso	22	dB
Min. Extinction Ratio	ER	20	dB
Min. Cross Talk	Ct	45	dB
Min. Return Loss	RL	45	dB
Max. Optical Power (CW)	P	1, 3, 5, 10, 20 or specify	W
Max. Peak Power	P	5, 10, 20 or specify	kW
Max. Tensil Load		5	N
Fiber Type		PM Panda fiber	-
Operating Temperature	T	+5~65	℃
Storage Temperature	T	-40~85	℃
Package Dimension			mm

Notice: Above specifications are tested at center wavelength without connector in room temperature @23℃.
For devices with connectors, IL will be 0.3dB higher, RL will be 5dB lower, ER will be 2dB lower.
Slow axis is default aligned to the connector key. Connectors only 1W CW optical power guarantee.

Drawing:

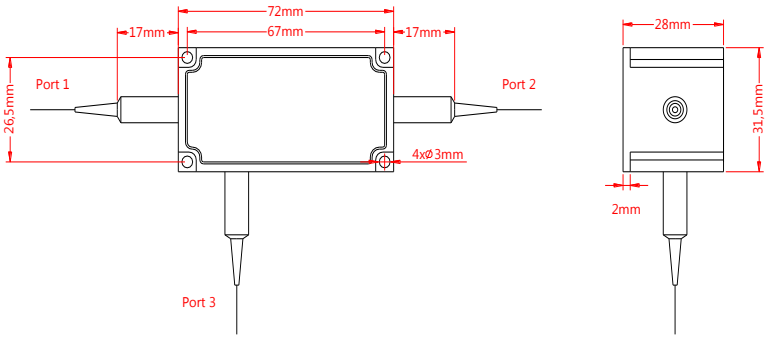

Ordering Information (Part Number):

HPMCIR-WWWW-P-A-HH-J-LL-CC

WWWW	P	A	HH	J	LL	CC
Wavelength	**Port**	**Working Axis**	**Handling Power**	**Fiber Jacket**	**Fiber Length**	**Connector**
1030 - 1030nm 1040 - 1040nm 1050 - 1050nm 1053 - 1053nm 1060 - 1060nm 1064 - 1064nm SSSS - Specify	3 - 3 Ports	F - Fast Axis Blocked Slow Axis Working B - Both Axes Working	01 - 1W 03 - 3W 05 - 5W 10 - 10W 15 - 15W 20 - 20W SS - Specify	B - 250um Bare Fiber 9 - 900um Loose Tube	05 - 0.5m 10 - 1.0m 15 - 1.5m 20 - 2.0m SS - Specify	NE - None FA - FC/APC FU - FC/UPC SA - SC/APC SU - SU/APC LA - LC/APC LU - LC/UPC SS - Specify